EVAPCO, INC.

UNIT	MODEL #	SCALE	DWG. #	REV.	DATE	SERIAL #
CLOSED CIRCUIT COOLER		NTS	W2241410-MRC-LFHR			

NOTES:
1. (M)- FAN MOTOR LOCATION
2. HEAVIEST SECTION IS UPPER SECTION
3. MPT DENOTES MALE PIPE THREAD
   FPT DENOTES FEMALE PIPE THREAD
   BFW DENOTES BEVELED FOR WELDING
4. + UNIT WEIGHT DOES NOT INCLUDE ACCESSORIES (SEE SEPARATE DRAWINGS FOR ACCESSORIES)
5. 19mm DIA. MOUNTING HOLES. REFER TO RECOMMENDED STEEL SUPPORT DRAWING
6. THE SPRAY PUMP SHOULD BE SIZED FOR 114 L/S AND 17 kPa AT THE INLET CONNECTION
7. *- APPROXIMATE DIMENSIONS DO NOT USE FOR PRE-FABRICATION OF CONNECTING PIPING

Preliminary

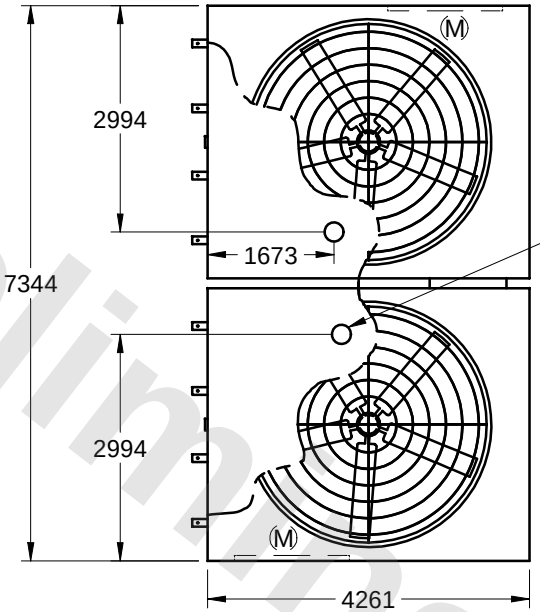

PLAN VIEW

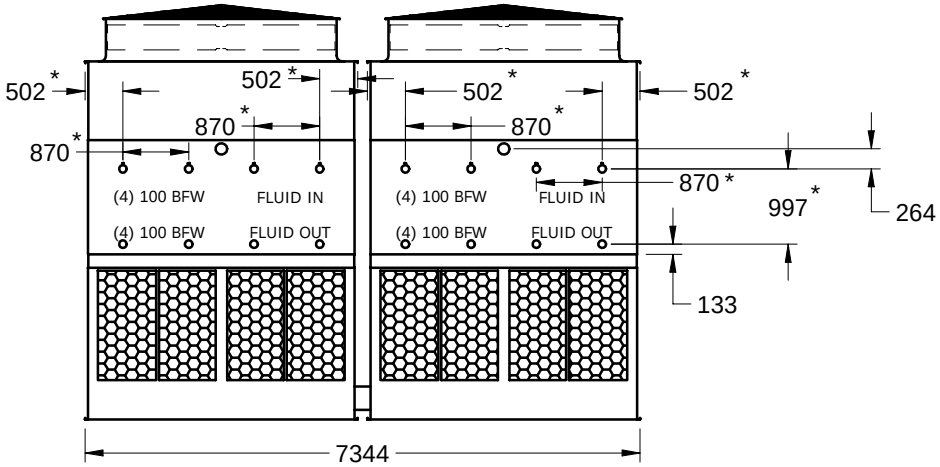

FACE 1

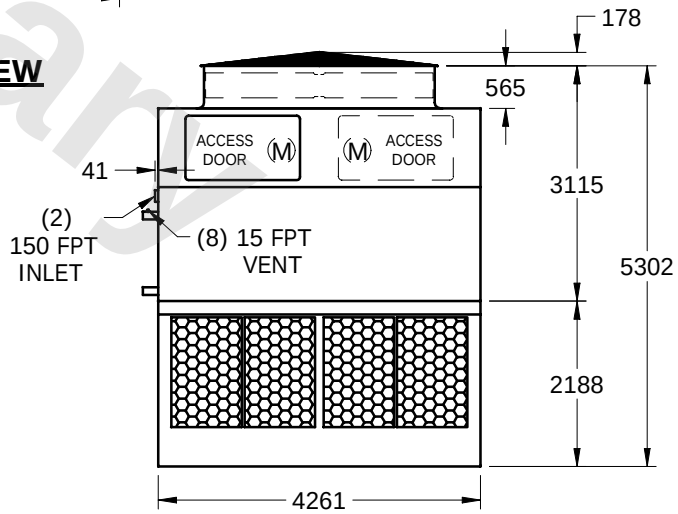

FACE 2

SHIPPING WEIGHT	20790	kg +	OPERATING WEIGHT	28030	kg	HEAVIEST SECTION WEIGHT	9055	kg	NO. OF SHIPPING SECTIONS	4