EVAPCO, INC.

UNIT	MODEL #	SCALE	DWG. #	REV.	DATE	SERIAL #
CLOSED CIRCUIT COOLER		NTS	W2TM1812-MRA-RL			

NOTES:
1. (M)- FAN MOTOR LOCATION
2. HEAVIEST SECTION IS UPPER SECTION
3. MPT DENOTES MALE PIPE THREAD
   FPT DENOTES FEMALE PIPE THREAD
   BFW DENOTES BEVELED FOR WELDING
4. +UNIT WEIGHT DOES NOT INCLUDE ACCESSORIES (SEE SEPARATE DRAWINGS FOR ACCESSORIES)
5. 19mm DIA. MOUNTING HOLES. REFER TO RECOMMENDED STEEL SUPPORT DRAWING
6. THE SPRAY PUMP SHOULD BE SIZED FOR 65 L/S AND 28 kPa AT THE INLET CONNECTION
7. *- APPROXIMATE DIMENSIONS DO NOT USE FOR PRE-FABRICATION OF CONNECTING PIPING

Preliminary

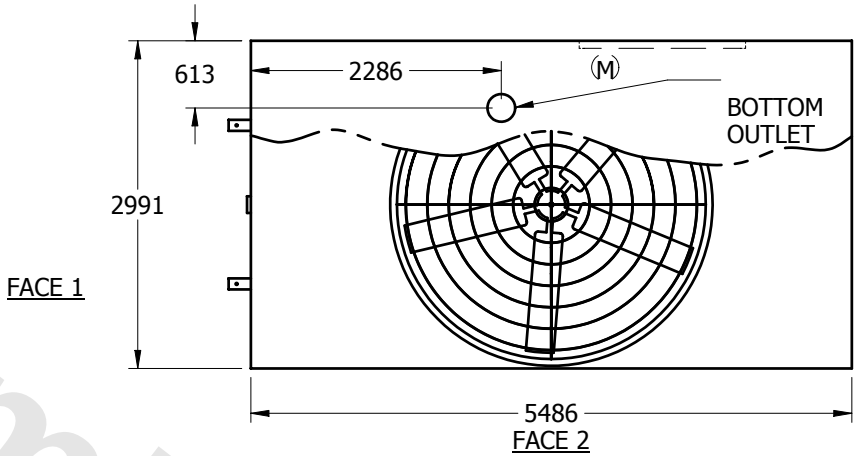

PLAN VIEW

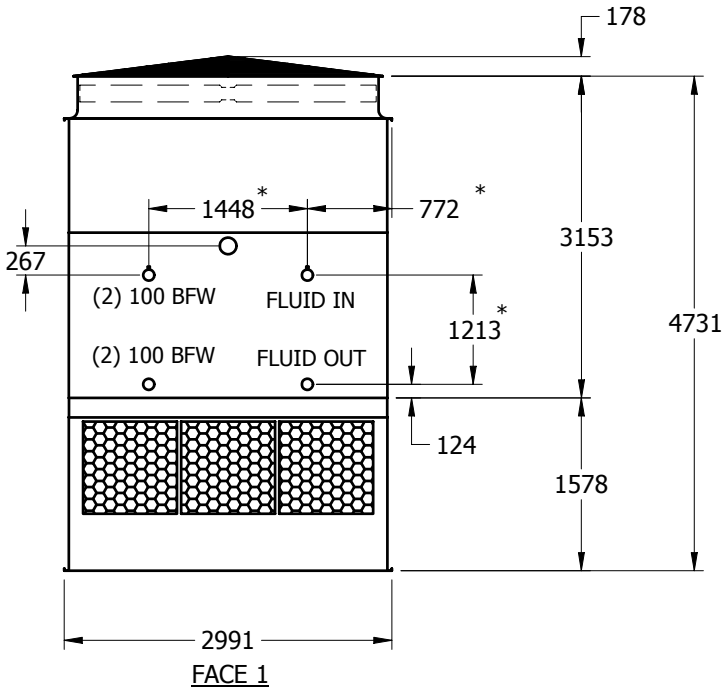

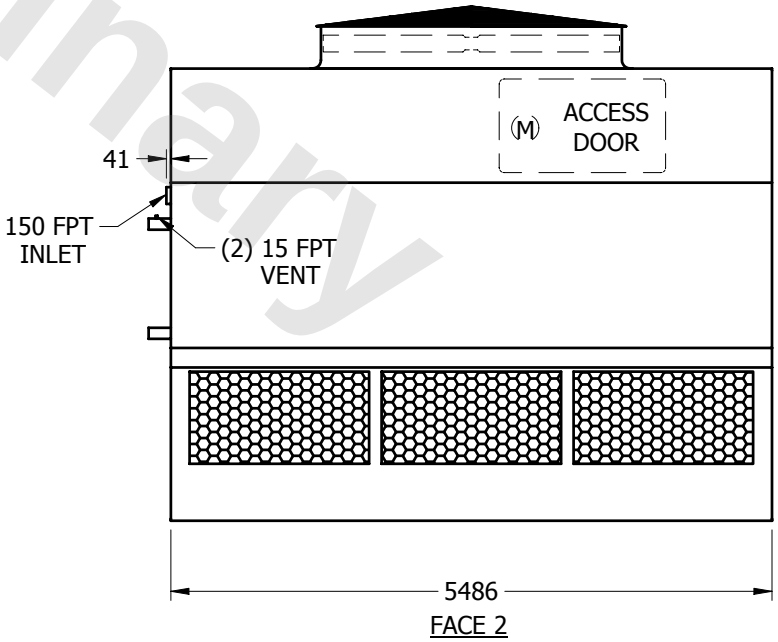

SHIPPING WEIGHT	11915 kg +	OPERATING WEIGHT	15975 kg	HEAVIEST SECTION WEIGHT	10275 kg	NO. OF SHIPPING SECTIONS	2