EVAPCO, INC.

UNIT	MODEL #	SCALE	DWG. #	REV.	DATE	SERIAL #
CLOSED CIRCUIT COOLER		NTS	W2241408-ERC-RS			

NOTES:
1. (M)- FAN MOTOR LOCATION
2. HEAVIEST SECTION IS UPPER SECTION
3. MPT DENOTES MALE PIPE THREAD
   FPT DENOTES FEMALE PIPE THREAD
   BFW DENOTES BEVELED FOR WELDING
4. + UNIT WEIGHT DOES NOT INCLUDE ACCESSORIES (SEE SEPARATE DRAWINGS FOR ACCESSORIES)
5. 3/4" DIA. MOUNTING HOLES. REFER TO RECOMMENDED STEEL SUPPORT DRAWING
6. THE SPRAY PUMP SHOULD BE SIZED FOR 1800 GPM AND 2.5 PSIG AT THE INLET CONNECTION
7. *- APPROXIMATE DIMENSIONS DO NOT USE FOR PRE-FABRICATION OF CONNECTING PIPING

Preliminary

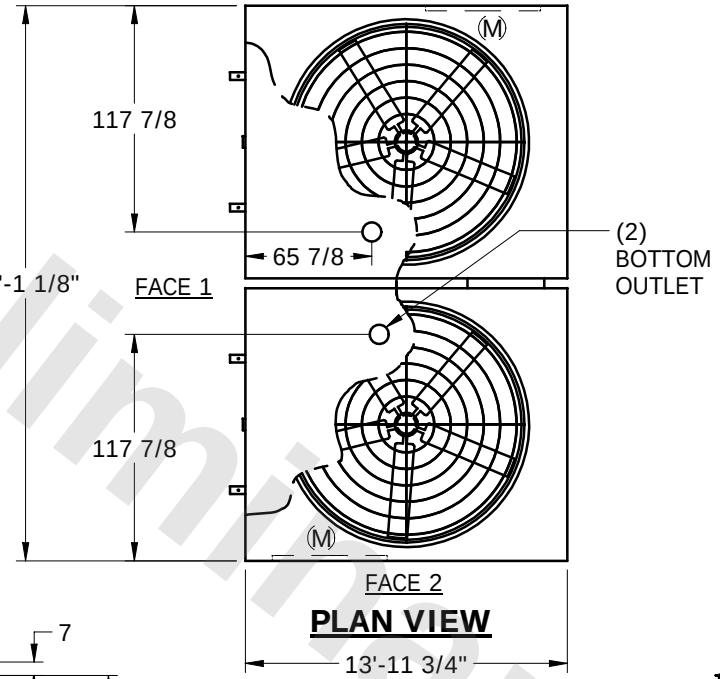

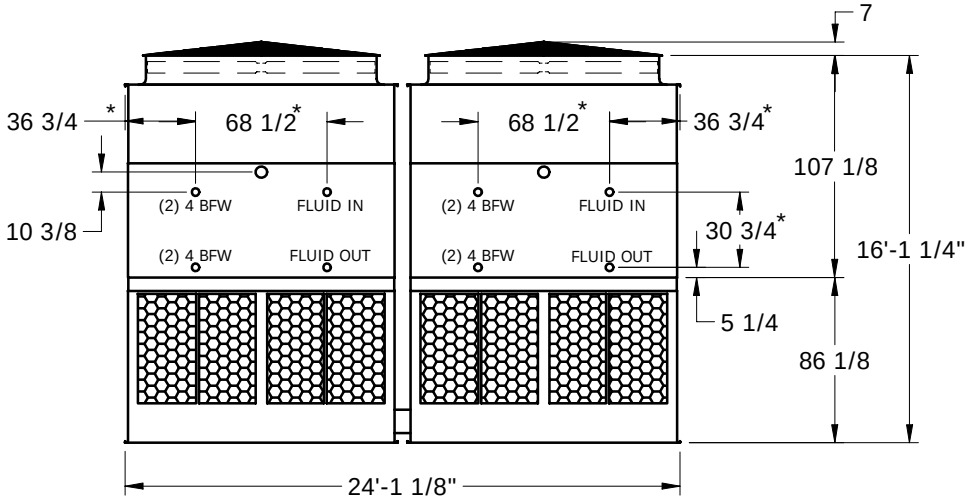

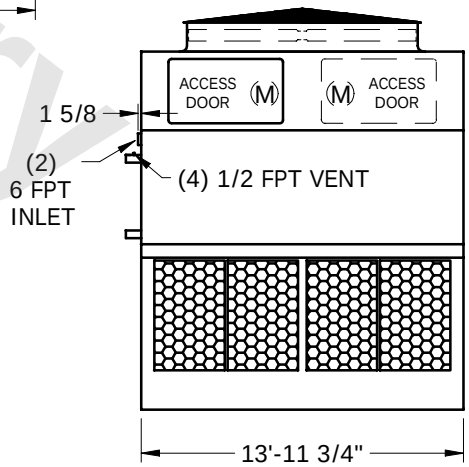

SHIPPING WEIGHT	39480 lbs.+	OPERATING WEIGHT	53340 lbs.	HEAVIEST SECTION WEIGHT	16780 lbs.	NO. OF SHIPPING SECTIONS	4