UNIT	EVAPCO, INC.	DWG. #	
ATC-DC-99J-35-2EF		THAL0809DB	
TITLE		SCALE	DRAWN BY
TAPERED DSCH HOOD W/DAMPERS		N.T.S.	JLG

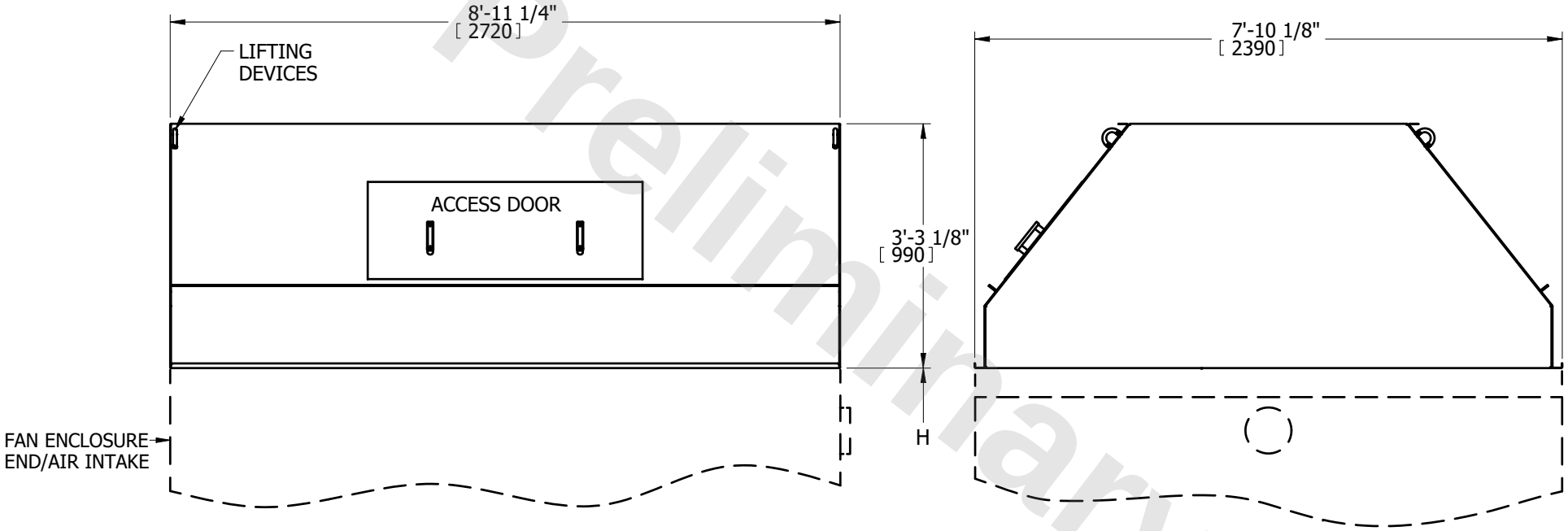

FACE C

FACE B

Preliminary

1. TOTAL HEIGHT OF UNIT WILL BE 3'-3 1/8" [990] PLUS HEIGHT (H) FROM UNIT CERTIFIED.
2. WEIGHT OF HOOD IS 380 LBS [172 kg].
3. WEIGHT IS FOR HOOD ONLY. THE ELIMINATOR WEIGHT IS INCLUDED IN THE SHIPPING WEIGHT ON THE CERTIFIED.
4. ELIMINATORS ARE SHIPPED WITH THE UNIT.
5. DIMENSIONS LISTED AS FOLLOWS: ENGLISH FT-IN
   [METRIC] [mm]