EVAPCO, INC.

UNIT	MODEL #	SCALE	DWG. #	REV.	DATE	SERIAL #
CLOSED CIRCUIT COOLER	PMC-976E	NTS	WP103612-MRB-ST		5/20/2024	

NOTES:
1. (M)- FAN MOTOR LOCATION
2. HEAVIEST SECTION IS UPPER SECTION
3. MPT DENOTES MALE PIPE THREAD
   FPT DENOTES FEMALE PIPE THREAD
   BFW DENOTES BEVELED FOR WELDING
4. +UNIT WEIGHT DOES NOT INCLUDE ACCESSORIES (SEE SEPARATE DRAWINGS FOR ACCESSORIES)
5. 3/4" DIA. MOUNTING HOLES. REFER TO RECOMMENDED STEEL SUPPORT DRAWING
6. MAKE-UP WATER PRESSURE-20 psi MIN, 50 psi MAX
7. * - APPROXIMATE DIMENSIONS DO NOT USE FOR PRE-FABRICATION OF CONNECTING PIPING.

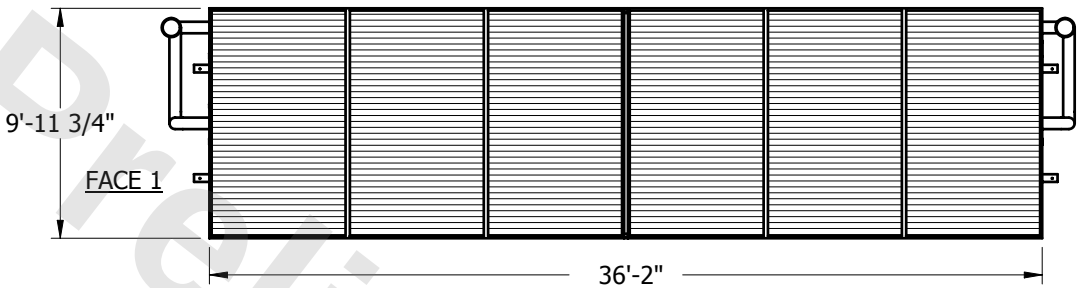

PLAN VIEW

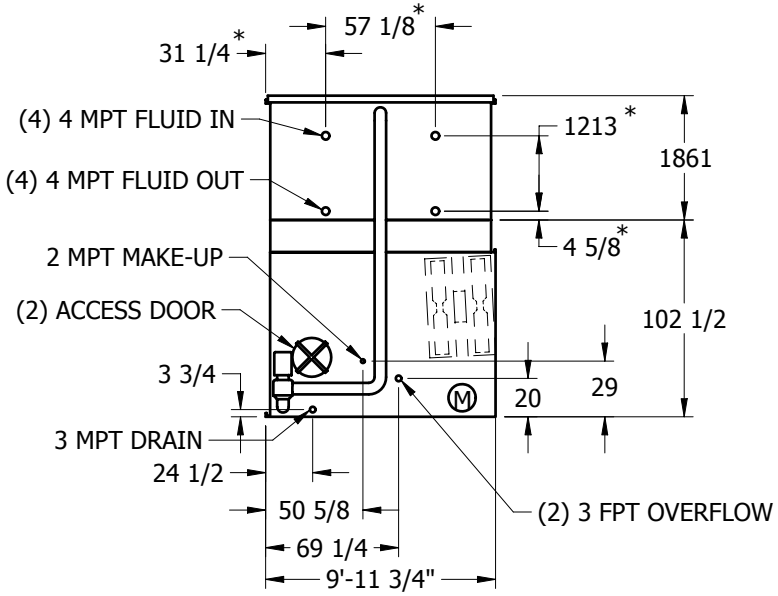

FACE 1

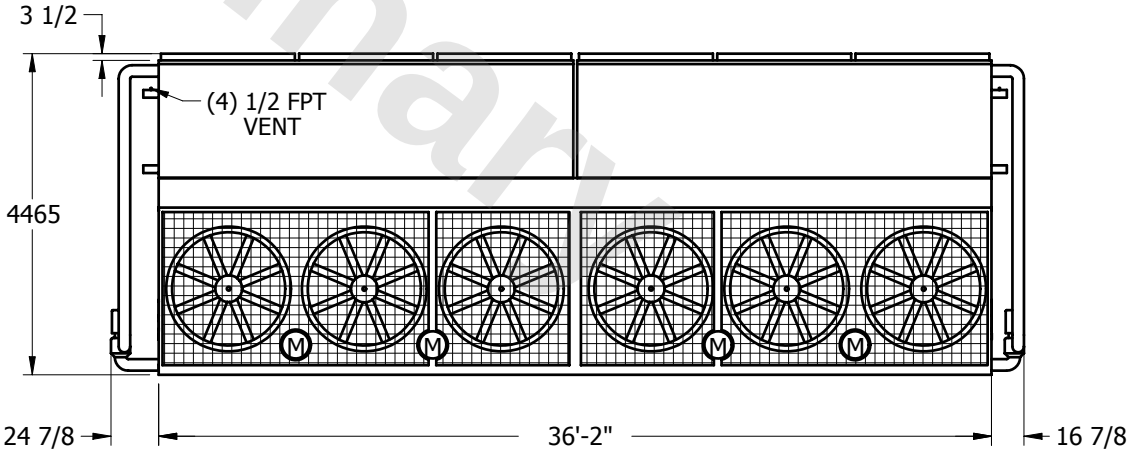

FACE 2

Preliminary

SHIPPING WEIGHT	OPERATING WEIGHT	HEAVIEST SECTION WEIGHT	NO. OF SHIPPING SECTIONS
26335 lbs.+	39685 lbs.	9920 lbs.	3